Vertical Toggle Clamp
Part No. GH-12401

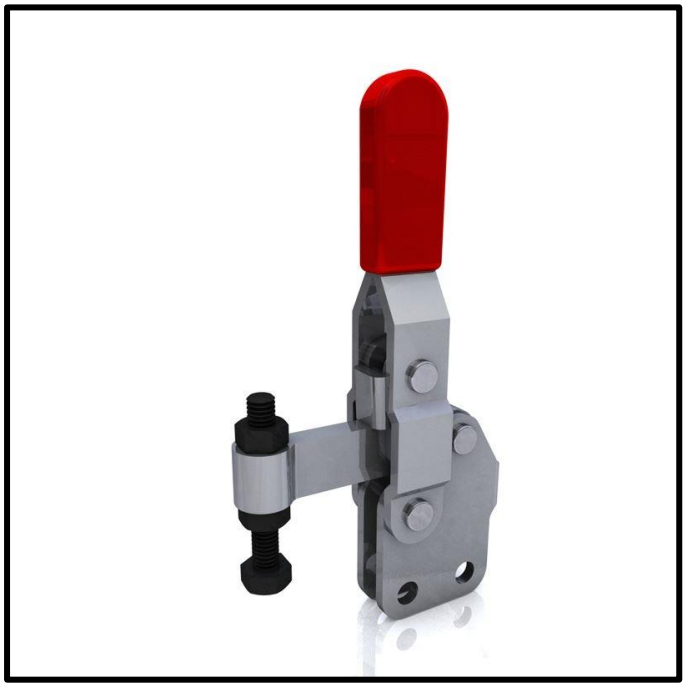

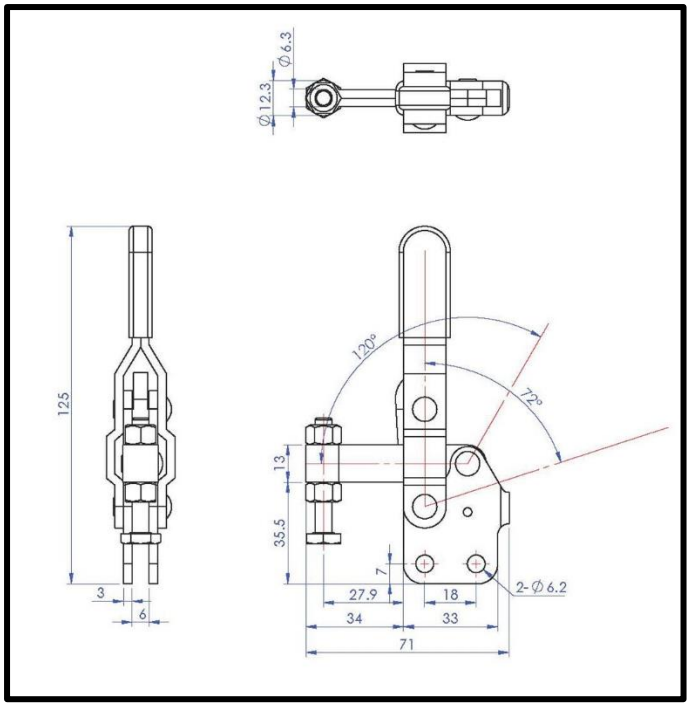

Product Description

Vertical Toggle Clamp Straight Base Fixed Arm Size 100Kg

Key Features

Overall Height:	125mm
Underarm Height:	35.5mm
Arm Length:	27.9mm
Holding Force:	100Kg

Other Features

Arm Opens:	120°
Handle Opens:	72°
Weight:	0.21Kg

Material

Clamp:	Zinc Plated Mild Steel
Spindle:	Zinc Plated Mild Steel
Handle:	uPVC

What's In The Bag?

GH-12401: Toggle Clamp
SA-064010: M6x44mm Zinc Plated Steel Spindle With Nuts