Latch Toggle Clamp
Part No. GH-40870-SS

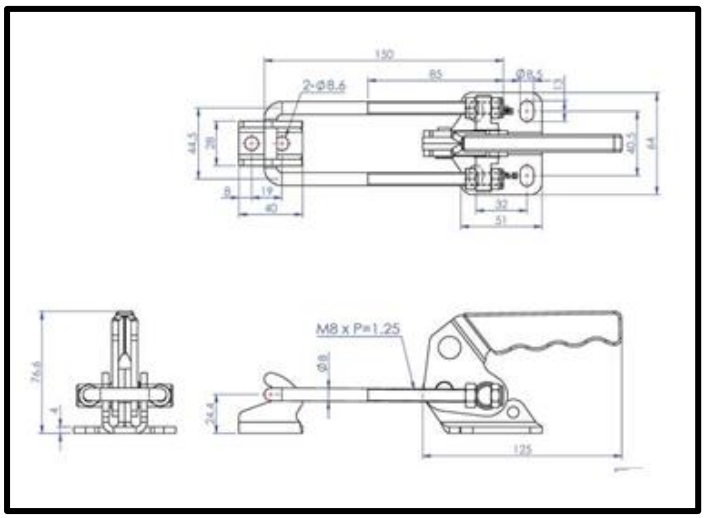

Product Description

Horizontal or Vertical Latch Clamp In SS Size 700daN

Key Features

Overall Height:	76.6mm
Clamp Length:	125mm
Catch Plate Width:	28mm
Holding Force:	700daN

Other Features

Weight:	0.66Kg

Material

Toggle Clamp:	304 Stainless Steel
U Bar:	304 Stainless Steel
Latch Plate:	304 Stainless Steel

What's In The Bag?

Toggle Clamp:	GH-40870-SS
Latch Plate:	GH-40870-LPSS
U Bar:	GH-40870-UBSS

goodhanduk.co.uk

01908 221 151