Vertical Toggle Clamp
Part No. GH-10752-BB

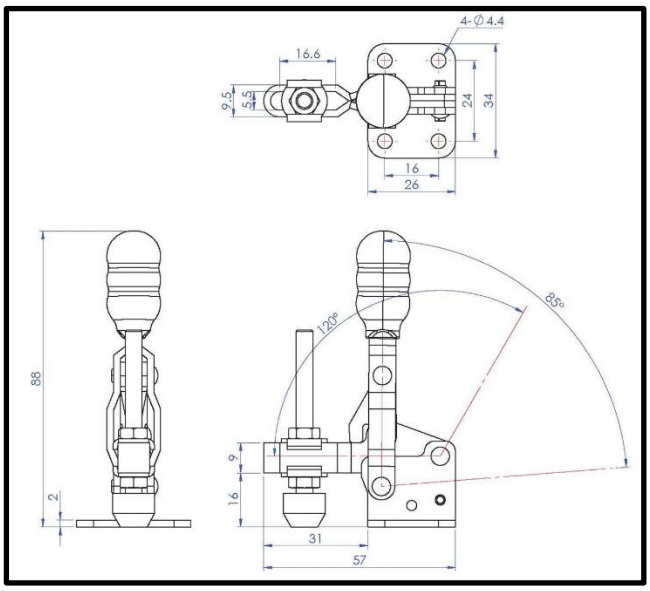

Product Description

Blackodised Vertical Toggle Clamp
Flat Base Slotted Arm Size 75Kg

Key Features

Overall Height:	**88mm**
Underarm Height:	**16mm**
Arm Length:	**31mm**
Holding Force:	**75Kg**

Other Features

Arm Opens:	**120°**
Handle Opens:	**85°**
Weight:	**0.09Kg**

Material

Clamp:	**Zinc Plated Mild Steel**
Spindle:	**Zinc Plated Mild Steel**
Handle:	**uPVC**
Neoprene Cap:	**Neoprene**

What's In The Bag?

GH-10752-BB: Toggle Clamp
2x FW-100: Flanged Washers For 5mm Spindle
SA-054008: Blackodised M5x37mm Neoprene Tipped Spindle With Nuts
NC-05 – Neoprene Cap For M5 Spindle

goodhanduk.co.uk
01908 221 151