In Line Toggle Latch
Part No. CS-0313

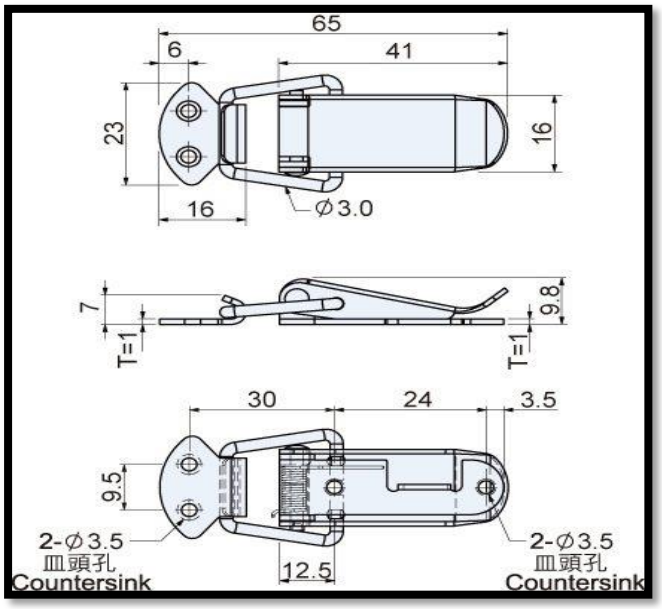

Product Description

In Line Toggle Latch With Catch Plate Stainless Steel L=65mm

Key Features

Overall Length:	**65mm**
Load Capacity:	**10daN**

Other Features

Weight:	**0.018Kg**

Material

Toggle Latch:	**Stainless Steel**

What's In The Bag?

Toggle Latch:	**CS-0313**
Latch Plate:	**CS-0312-2**

goodhanduk.co.uk

01908 221 151