Vertical Toggle Clamp
Part No. GH-101-H

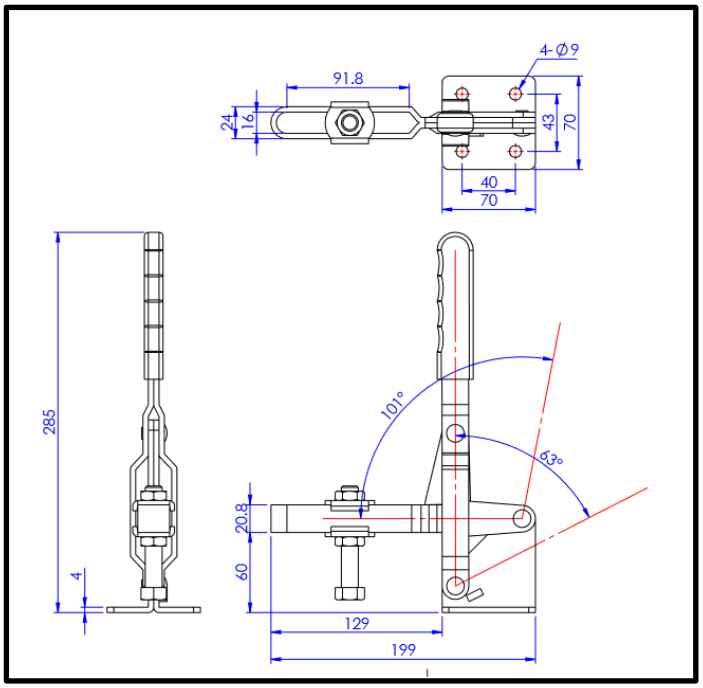

Product Description

Vertical Toggle Clamp Flat Base
Slotted Arm Size 450Kg

Key Features

Overall Height:	285mm
Underarm Height:	60mm
Arm Length:	129mm
Holding Force:	450Kg

Other Features

Arm Opens:	101°
Handle Opens:	63°
Weight:	1.25Kg

Material

Clamp:	Zinc Plated Mild Steel
Spindle:	Zinc Plated Mild Steel
Handle:	uPVC

What's In The Bag?

GH-101-H: Toggle Clamp
2x FW-120: Flanged Washers For 12mm Spindle
SA-121017: M12x100mm Zinc Plated Steel Spindle With Nuts

goodhanduk.co.uk
01908 221 151