Hook Toggle Clamp
Part No. GH-452-SS

Product Description

Stainless Steel Hook Clamp Optional Latch Plate Size 170daN

Key Features

Overall Height:	**36.5mm**
Length:	**212mm**
Hook Diameter:	**8mm**
Holding Force:	**170daN**

Other Features

Weight:	**0.26Kg**

Material

Toggle Clamp:	**Stainless Steel**
Hook:	**Stainless Steel**

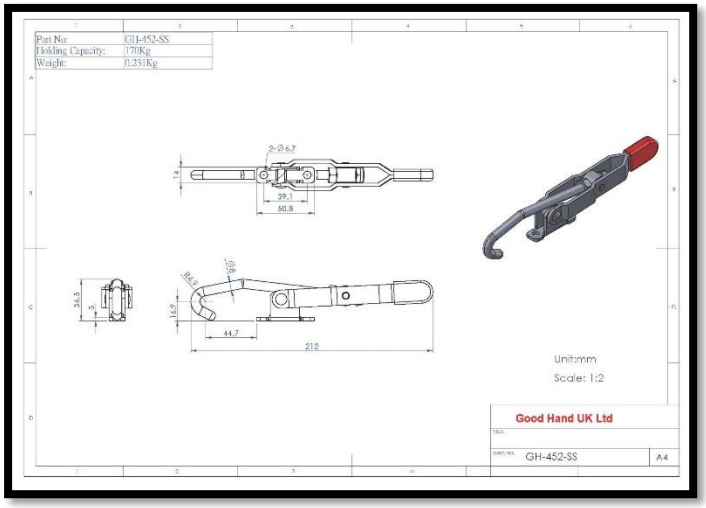

What's In The Bag?

Toggle Clamp:	**GH-452-SS**

goodhanduk.co.uk

01908 221 151