Latch Toggle Clamp
Part No. GH-40334-SS

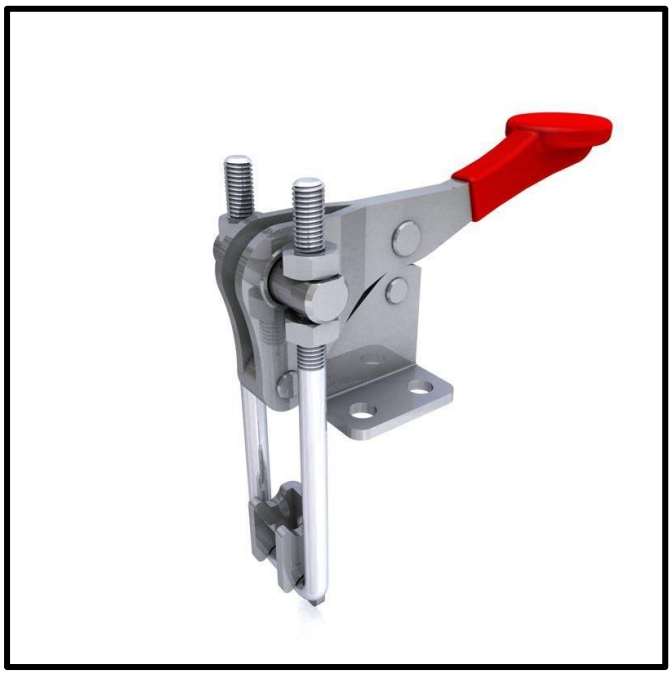

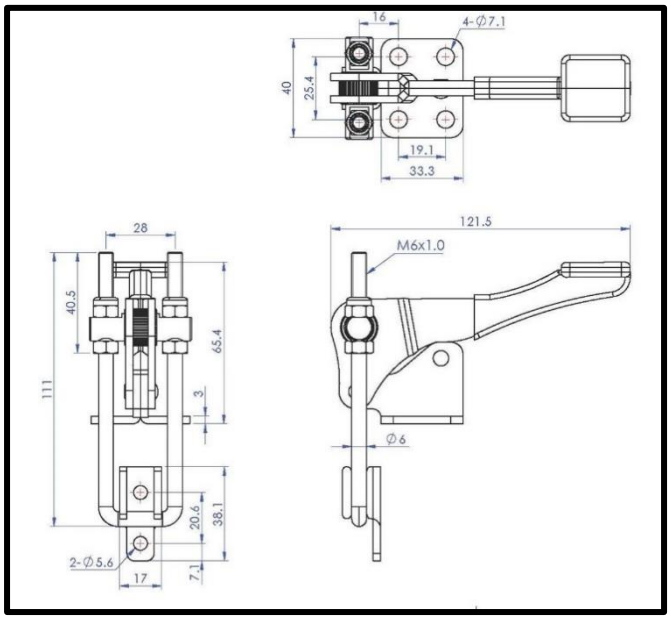

Product Description

Stainless Steel Latch Clamp With Latch Plate Size 450daN

Key Features

Overall Height:	111mm
Catch Plate Width:	17mm
Holding Force:	450daN

Other Features

Weight:	0.3Kg

Material

Toggle Clamp:	304 Stainless Steel
U Bar:	304 Stainless Steel
Latch Plate:	304 Stainless Steel

What's In The Bag?

Toggle Clamp:	GH-40334-SS
Latch Plate:	GH-40334-LPSS
U Bar:	GH-40334-UBSS

goodhanduk.co.uk

01908 221 151